*Align the center line with the center line of the wooden door

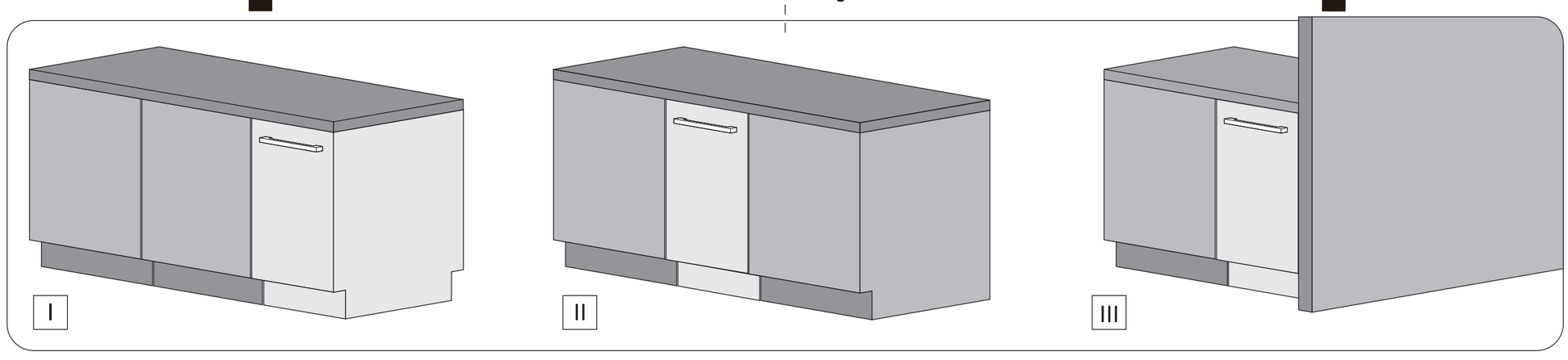

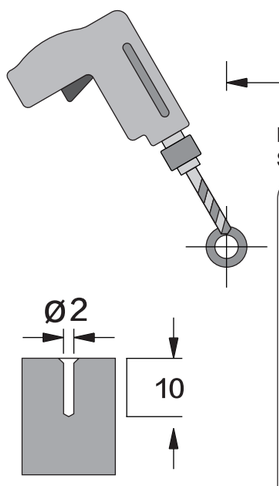

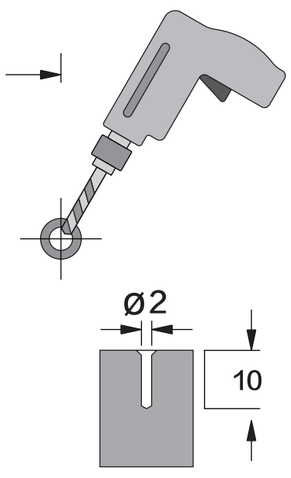

Decorative door dimension
Sliding type:Height 660~800mm Width 450~455mm Thickness 20mm

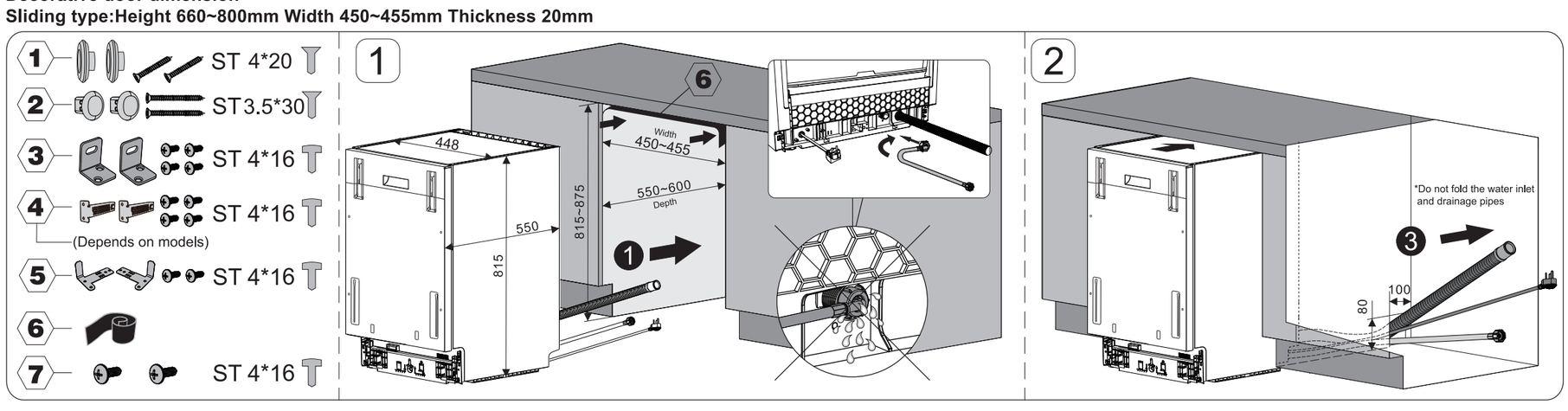

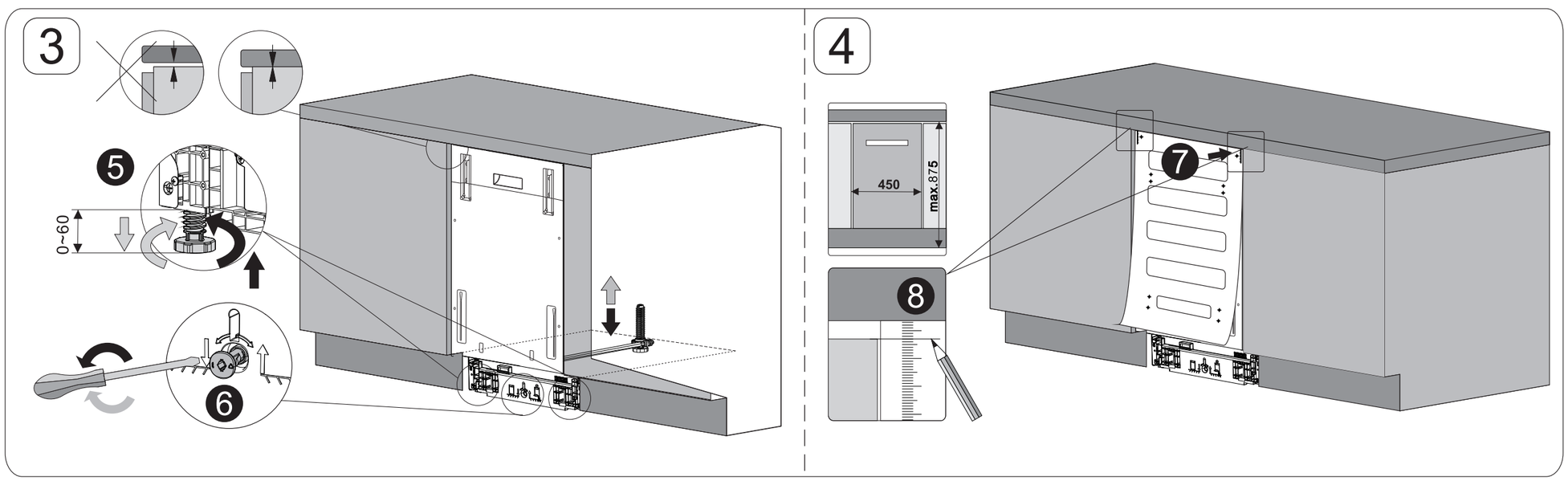

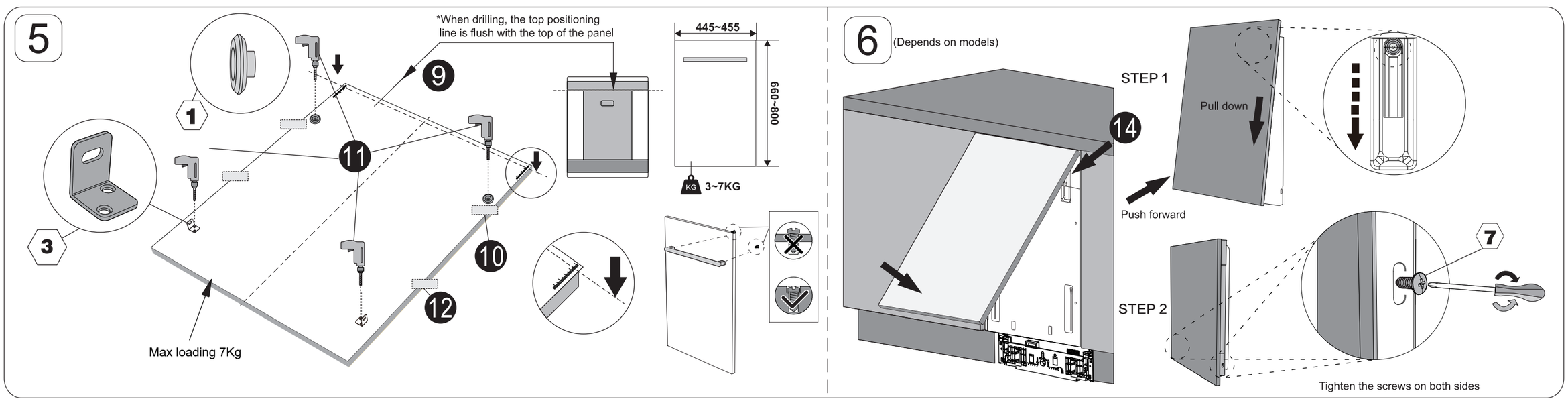

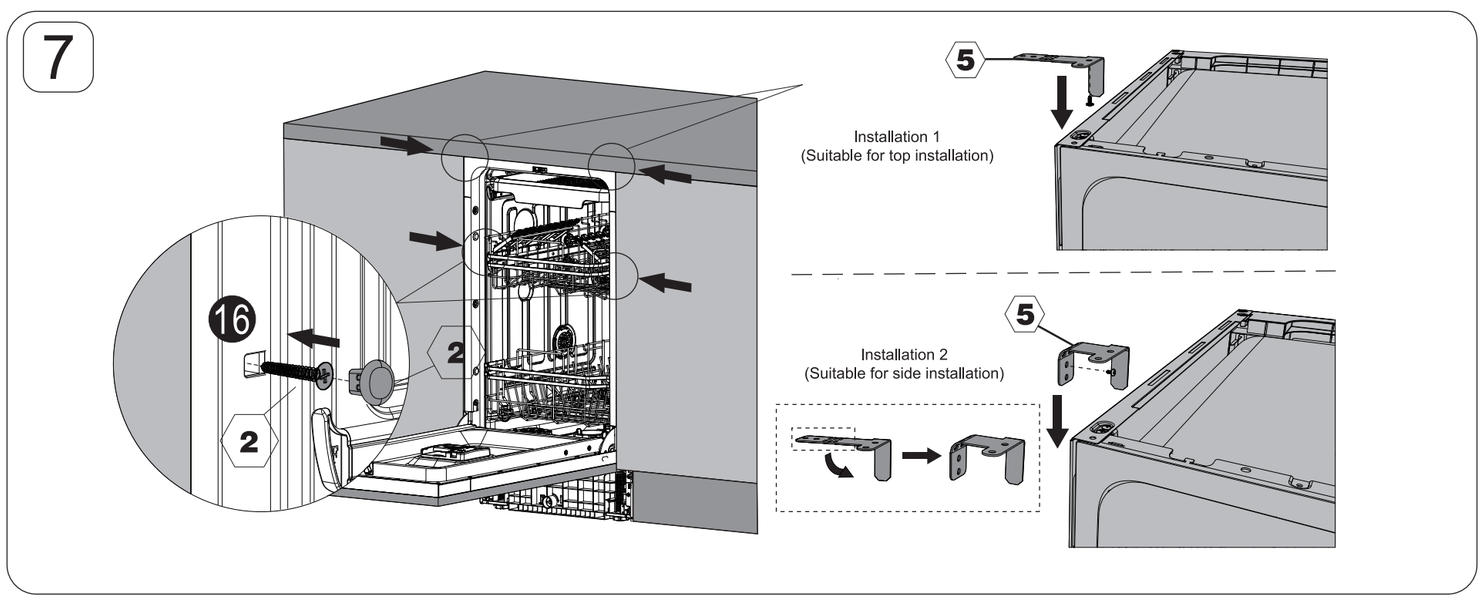

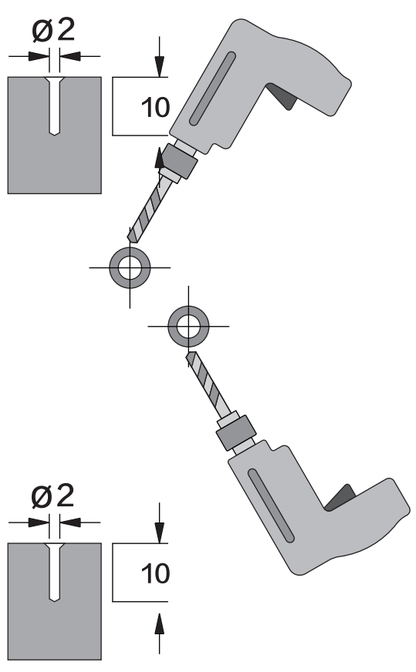

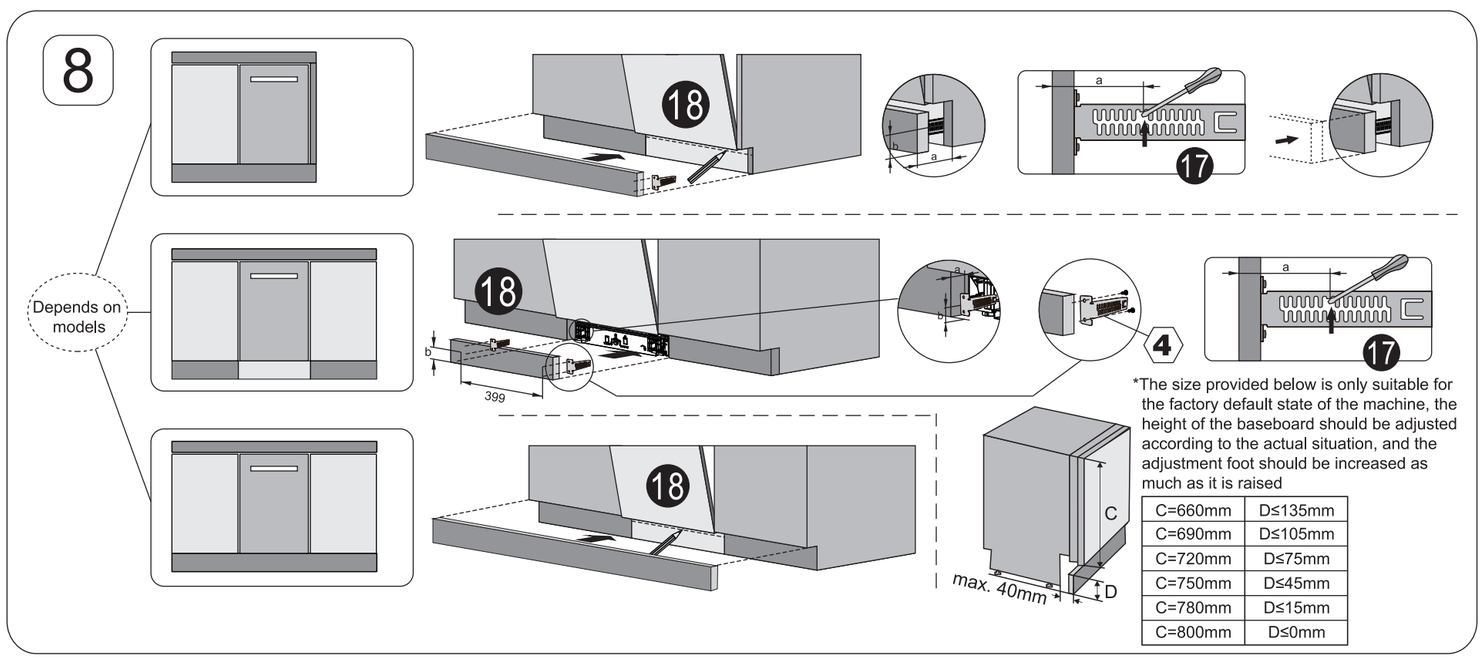

*The size provided below is only suitable for the factory default state of the machine, the height of the baseboard should be adjusted according to the actual situation, and the adjustment foot should be increased as much as it is raised
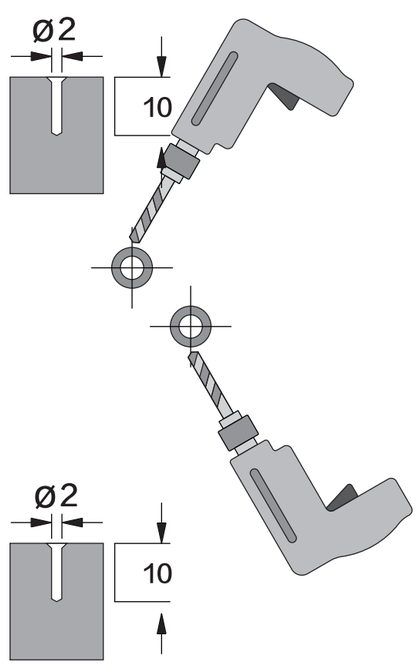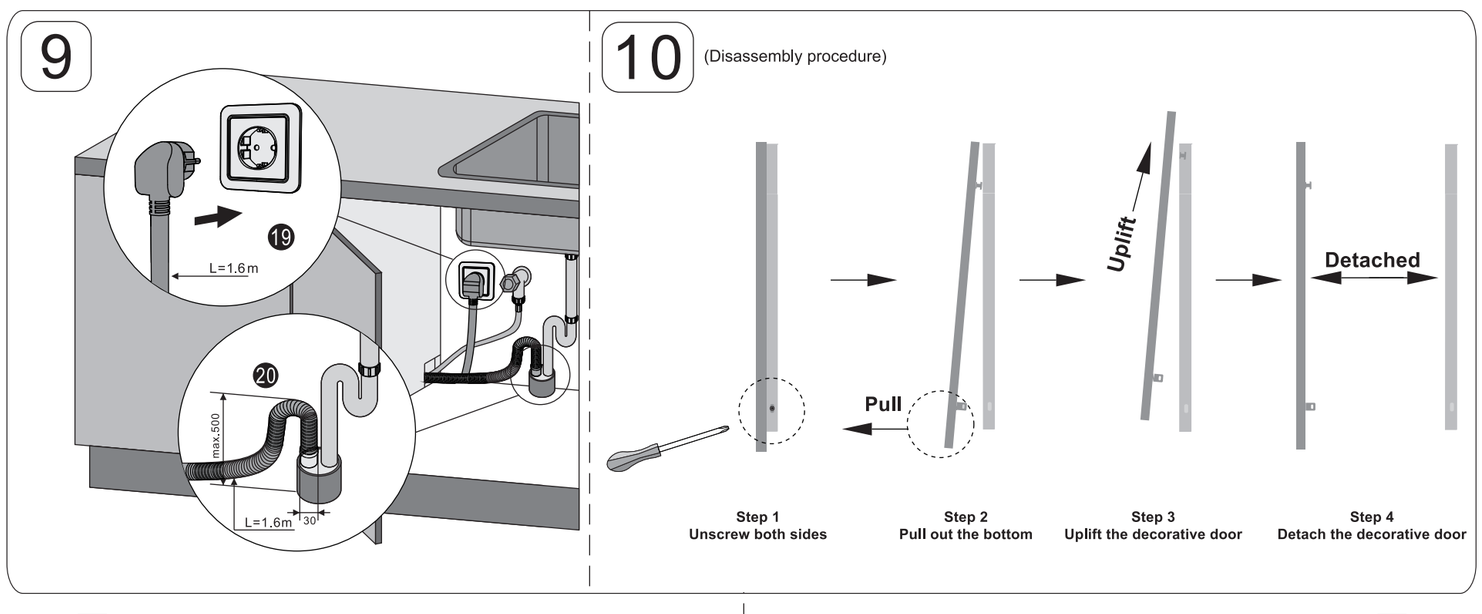
C=660mm	Ds135mm
C=690mm	Ds105mm
C=720mm	Ds75mm
C=750mm	Ds45mm
C=780mm	Ds15mm
C=800mm	Ds0mm