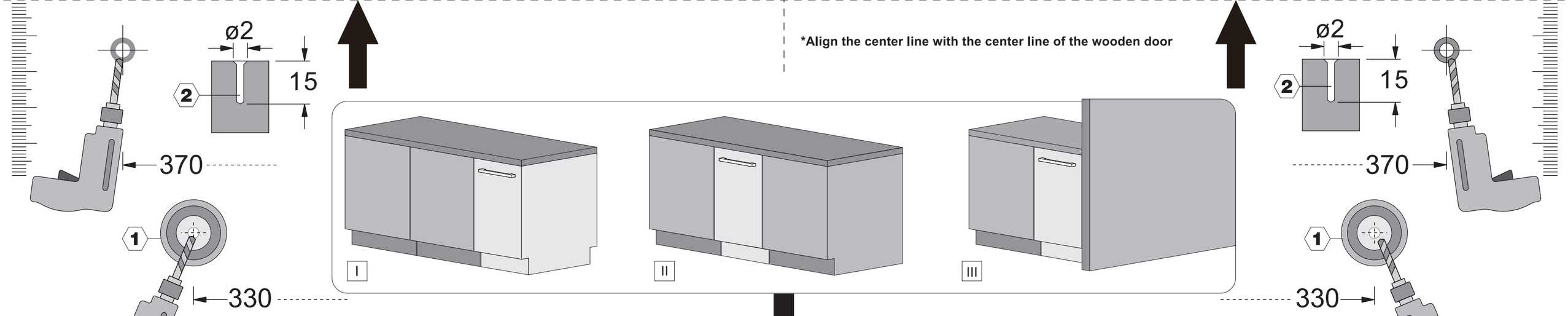

*Align the center line with the center line of the wooden door

Decorative door dimension
Fixed type:Height 660~720mm Width 450~455mm Thickness 20mm

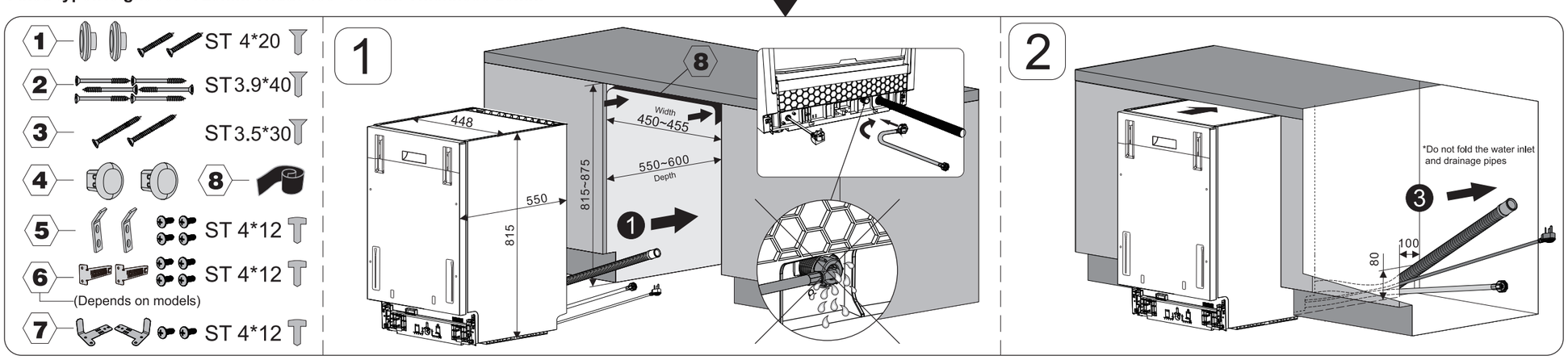

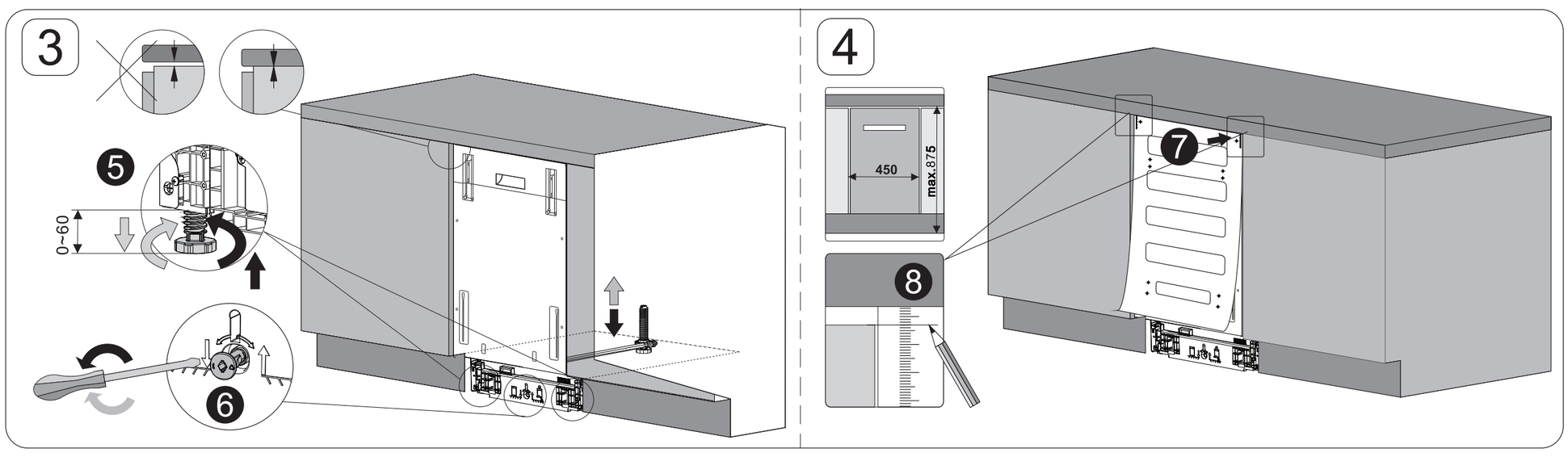

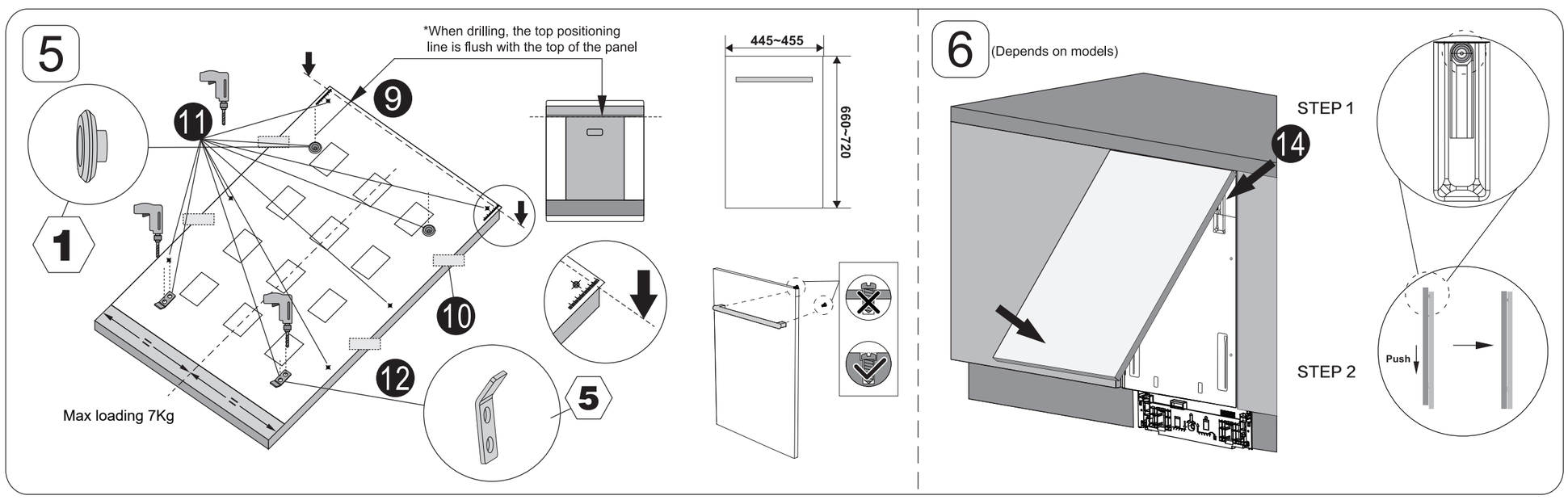

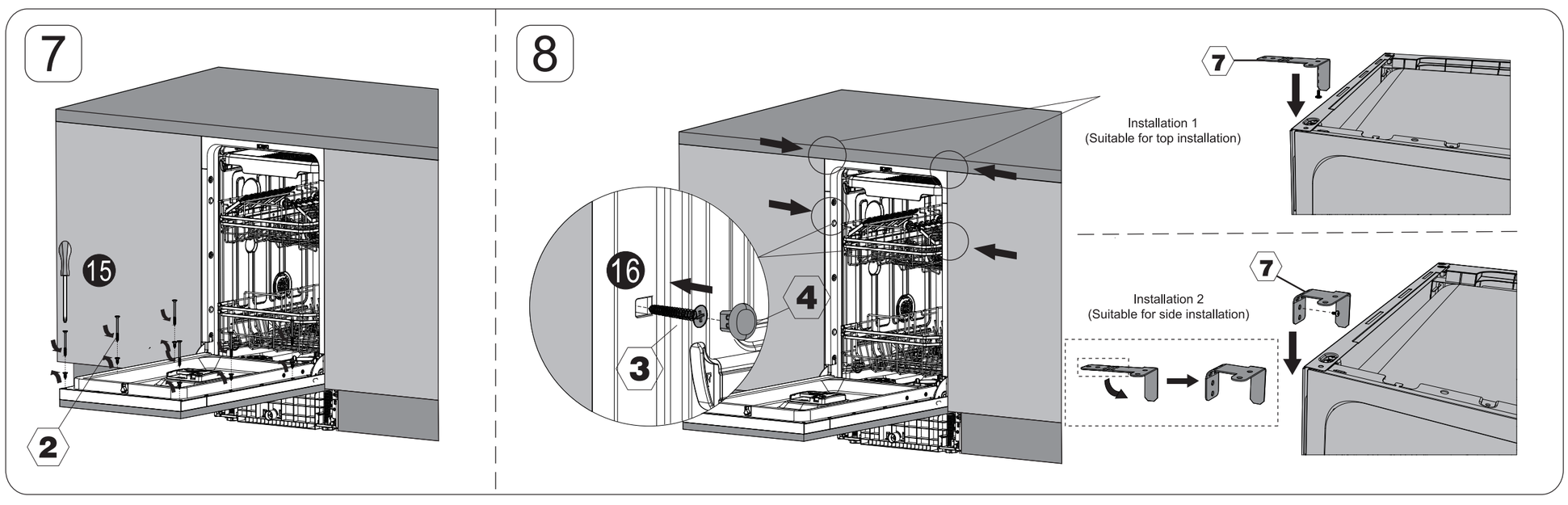

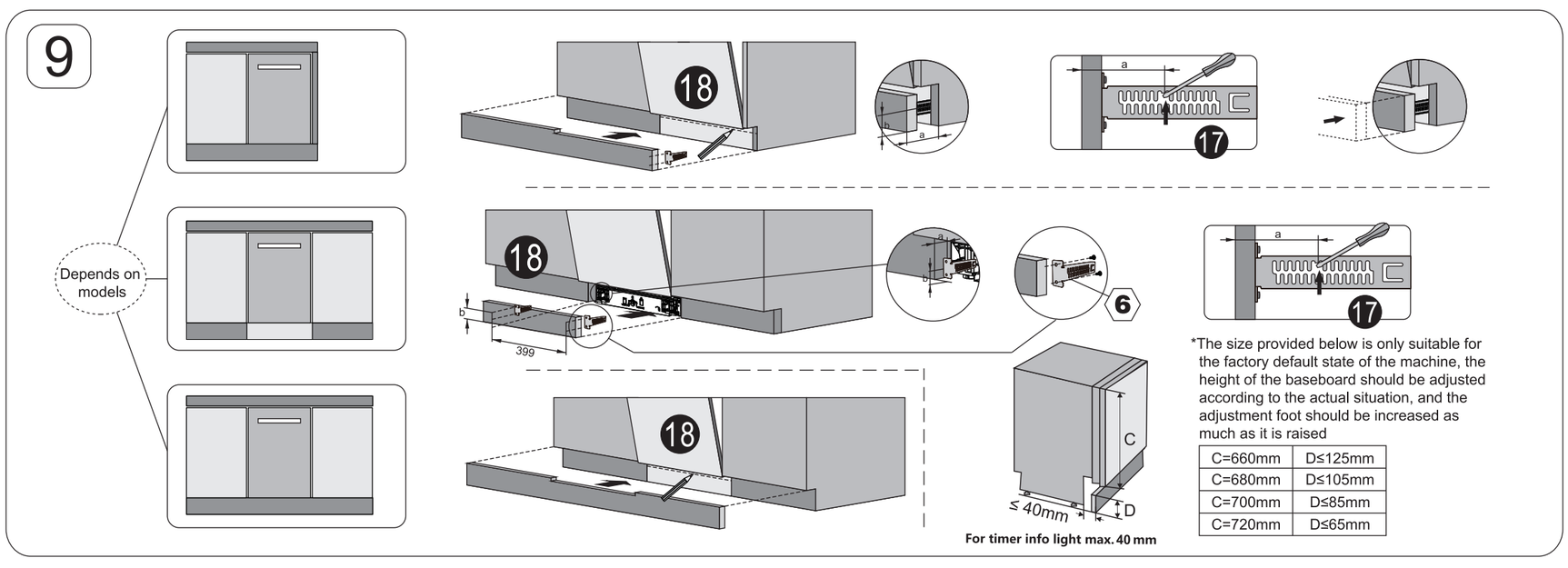

*The size provided below is only suitable for the factory default state of the machine, the height of the baseboard should be adjusted according to the actual situation, and the adjustment foot should be increased as much as it is raised
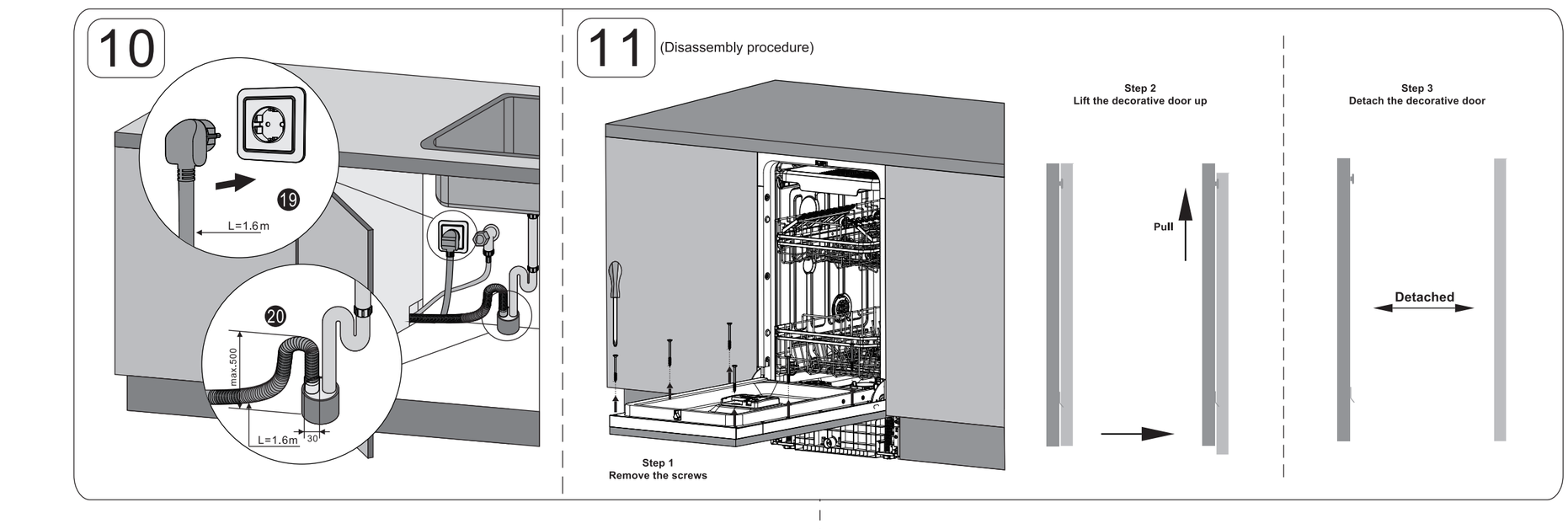
C=660mm	D≤125mm
C=680mm	D≤105mm
C=700mm	D≤85mm
C=720mm	D≤65mm